PROTECTION AND ADVOCACY FOR PEOPLE WITH DISABILITIES, INC.

SOUTH CAROLINA MEDICAID WAIVER PROGRAM:

A Guide for Self-Advocates

This publication provides legal information, but is not intended to be legal advice. The information was based on the law at the time it was written. As the law may change, please contact P&A for updates of this manual:

Toll Free in SC: 1-866-275-7273 (Voice)/1-866-232-4525 (TTY)
www.pandasc.org
Protection and Advocacy for People with Disabilities, Inc.
3710 Landmark Drive—Suite 208
Columbia SC 29204

P&A does not discriminate on the basis of disability, race, gender, or national origin in the provision of its programs or services. Pete Cantrell is P&A's designated coordinator for Section 504 of the Rehabilitation Act of 1973 and the Americans with Disabilities Act. This publication is funded in part by the US Department of Health and Human Services (Substance Abuse and Mental Health Services Administration and the Administration on Developmental Disabilities) and by the US Department of Education (Rehabilitation Services Administration). It does not necessarily represent the official views of the funding authorities.

7-22-10

Table of Contents

INTRODUCTION	3
MENTAL RETARDATION / RELATED DISABILITIES WAIVER PROGRAM	4
COMMUNITY SUPPORTS WAIVER PROGRAM	5
HEAD AND SPINAL CORD INJURY (HASCI) WAIVER PROGRAM	6
PERVASIVE DEVELOPMENTAL DISORDER (PDD) WAIVER PROGRAM	9
COMMUNITY CHOICES WAIVER PROGRAM	11
HIV / AIDS WAIVER PROGRAM	11
MECHANICAL VENTILATOR WAIVER PROGRAM	12
MEDICALLY COMPLEX CHILDREN'S WAIVER PROGRAM	13
COMMUNITY BASED ALTERNATIVES TO PSYCHIATRIC RESIDENTIAL TREATMENT FACILITIES (CHANCE-PRTF) WAIVER PROGRAM	14
APPENDIX A: Disabilities and Special Needs (DSN) Board Offices in South Carolina	17
APPENDIX B: Local Community Long Term Care Offices in South Carolina	21
APPENDIX C: Sample Letters and Documents A-Q	23
APPENDIX D: Appeal Chart	40

SOUTH CAROLINA MEDICAID WAIVER PROGRAM: A GUIDE FOR SELF ADVOCATES

Introduction

The Medicaid Waiver[1] Program is one of the primary avenues to get the services you need to live in the community rather than an institution. **To be eligible for Medicaid waivers you must be eligible for Medicaid and require the level of care provided in a hospital, nursing facility or ICF/MR (Intermediate Care Facility for the Mentally Retarded[2]).** Waivers are used to supplement services provided through the state Medicaid plan, so it is essential to apply for Medicaid as well if you are not already enrolled. In addition, the EPSDT (Early and Periodic Screening, Diagnosis and Treatment) Medicaid program provides comprehensive and preventive health services to Medicaid-eligible children from birth to age 21 years. For more information about EPSDT, see the EPSDT fact sheet at http://www.pandasc.org/EPSDT%20Fact%20Sheet.doc .

South Carolina has nine Medicaid waiver programs under the S.C. Department of Health and Human Services (DHHS). Three state agencies operate the waivers. The Department of Disabilities and Special Needs (DDSN) operates the Mental Retardation or Related Disabilities (MR/RD) waiver, the Community Supports waiver, the Head and Spinal Cord Injuries (HASCI) waiver, and the Pervasive Developmental Disorder (PDD) waiver. For a list of local DSN Board contact information, see Appendix A. Community Long Term Care (CLTC), a division of DHHS, operates the Community Choices waiver, the HIV/AIDS waiver, the Mechanical Ventilator waiver, and the Medically Complex Children's Waiver. For a list of local CLTC offices and contact information, see Appendix B. The Department of Mental Health (DMH) operates the Psychiatric Residential Treatment Facilities (CHANCE-PRTF) waiver.

South Carolina Medicaid Waivers:

1. Mental Retardation or Related Disabilities (MR/RD) Waiver Program
   http://www.ddsn.sc.gov/providers/medicaidwaiverservices/Pages/default.aspx
2. Community Supports Waiver Program
   http://www.ddsn.sc.gov/providers/medicaidwaiverservices/Pages/default.aspx
3. Head and Spinal Cord Injuries (HASCI) Waiver Program
   http://www.ddsn.sc.gov/providers/medicaidwaiverservices/Pages/default.aspx
4. Pervasive Developmental Disorder (PDD) Waiver Program
   http://www.ddsn.sc.gov/providers/medicaidwaiverservices/Pages/default.aspx
5. Community Choices Waiver Program
   http://www.scdhhs.gov/insidedhhs/bureaus/BureauofLongTermCareServices/CLTCOverview.asp#ElderlyDisabled
6. HIV/AIDS Waiver Program
   http://www.scdhhs.gov/insidedhhs/bureaus/BureauofLongTermCareServices/HIV_AIDSWaiver.asp
7. Mechanical Ventilator Waiver Program
   http://www.scdhhs.gov/insidedhhs/bureaus/BureauofLongTermCareServices/MechanicalVentilatorDependent.asp

[1] This is called a "waiver" program because it allows for the provision of services that are not normally covered by basic Medicaid rules. When states want to offer these specialized services, they apply to the federal Medicaid agency for a "waiver" of the basic rules.
[2] The term "mentally retarded" is not regularly used by P&A, as it is no longer acceptable to individuals with intellectual disabilities and their advocates. However, it is utilized in this Manual when it is still part of official government terminology or laws.

8. Medically Complex Children's Waiver Program
http://www.scdhhs.gov/children.asp
9. Psychiatric Residential Treatment Facilities (CHANCE-PRTF) Waiver Program
http://www.chance.sc.gov/

If you have not applied for a Medicaid Waiver before, it is important to do so as soon as possible. Each Medicaid waiver has its own set of criteria as well as specific services offered. It is very important to **get everything in writing**. When requesting a waiver, do so in writing and keep a copy for your records. You may want to send the application and any appeal letters via certified mail, return receipt requested so that you may prove receipt by the agency involved and the actual date it was received. We ask that you send a copy of each letter to Anna Maria Darwin at Protection and Advocacy so that we may track issues/problems with the waivers. This does not mean that Ms. Darwin or P&A represents you. It is not permissible for anyone to deny your request over the phone or tell you the state is not taking applications at this time. Make sure that the agency sends you a determination in writing of whether or not you meet the criteria for the waiver.

If you have any questions or need further assistance, contact Protection and Advocacy for People with Disabilities, Inc. toll-free at 1-866-275-7273 (VOICE) or 1-866-232-4525(TTY).

MENTAL RETARDATION/RELATED DISABILITIES (MR/RD) WAIVER PROGRAM

Who should apply:

The MR/RD Waiver is for persons who (1) have an intellectual disability (mental retardation) or a related disability, (2) are eligible for Medicaid, and (3) who need home and community-based services in order to live in the community. Persons must also require the degree of care that would be provided in an Intermediate Care Facility for the Mentally Retarded (ICF/MR). Persons must have needs that can be met by the provision of services funded by the waiver. If the cost of home and community based services exceeds the cost of a level of care in an ICF/MR, DDSN **may** be able to deny waiver services. (See page 5 for how to apply.)

Services:

Adult Companion Services
Adult Dental Services
Audiology Services
Day Activity Services
Personal Care Services (I/II)
Community Services
Prescription Drugs
Private Vehicle Modifications
Residential Habilitation
Durable Medical Equipment/
Assistive Technology
Adult Attendant Care
Adult Day Health Care-Transportation
Adult Day Health Care
Adult Vision Services
Behavior Support Services
Environmental Modifications
Nursing Services
Support Center Services
Career Preparation Services
Psychological Services
Respite Care
Employment Services
Adult Day Health Care Nursing Services
Personal Emergency Response System

COMMUNITY SUPPORTS WAIVER PROGRAM

Who should apply:

The eligibility requirements for the Community Supports Waiver are the same as the MR/RD Waiver. The Community Supports Waiver is for persons who (1) have an intellectual disability (mental retardation) or a related disability, (2) are eligible for Medicaid, and (3) who need home and community-based services in order to live in the community. Persons must also require the degree of care that would be provided in an Intermediate Care Facility for the Mentally Retarded (ICF/MR). Persons must have needs that can be met by the provision of services funded by the waiver **and within the annual funding cap of approximately $9,000**. (See below for how to apply.)

Services:

In-Home Support Services
Support Center Services
Day Activity Services
Personal Care Services (I/II)
Career Preparation Services
Psychological Services
Specialized Medical Equipment, Supplies, Assistive Technology & Appliances
Adult Day Health Care
Community Services
Behavior Support Services
Environmental Modifications
Behavior Support Services
Private Vehicle Modifications
Respite Care
Employment Services
Adult Day Health Care-Nursing
Adult Day Health-Transportation

How to Apply for the MR/RD or Community Supports Waiver

Call your Service Coordinator. Tell him/her you want to apply for the MR/RD or Community Supports waiver program (or both) and ask for any information they have regarding the waiver and the application process. Explain your circumstances and any urgent need for services. Write down the name of the person you talked to. **If you are not a client of DDSN and do not have a service coordinator, call the Intake line at the Center for Disability Resources (CDR) at 1-800-289-7012. You can apply for DDSN eligibility and waiver services simultaneously.** CDR will screen individuals and, if appropriate, provide the applicant with a list of service coordination providers. The applicant will select his or her top two choices and CDR will make a referral to both providers. The providers will then have 4 business days to accept or decline the referral. The service coordination provider will then begin the formal consideration process for DDSN eligibility and waiver services.

Confirm in writing. Even if you are told no money or services are available right now, it is **very** important to put your request in writing and either have your name added to the waiting list or receive a denial in writing. (See Appendix C, sample letter "A".) **In your letter, state that you are confirming your request for waiver services, mention the name of the person you talked to on the phone. Also explain, in detail, if you feel you have a critical need for waiver services (such as a recent or pending discharge from a hospital**

or the loss of a caregiver), because it may determine how quickly you are able to receive services. Keep a copy of this letter for your records.

Receive Written Response of Eligibility
As an Applicant, you should receive a written notice confirming or denying your eligibility or placing you on a waiting list. Make sure you get a written response. **If you wait longer than 90 days for this determination or you are refused a response in writing, contact Protection and Advocacy for People with Disabilities, Inc. for possible assistance.**

If Placed on a Waiting List
Since an applicant's priority category and place on the waiting list are the primary factors that determine when a slot is awarded and services begin, you should appeal if you feel a mistake was made in placing you in a particular category. Call your local DDSN coordinator for the DDSN appeal process.

Send a Letter to Check on Waiting List Status
If you have been on the waiting list longer than 60 days without hearing from your service coordinator, you may want to write a letter to your service coordinator asking where you are on the waiting list. (See Appendix C, sample letter "B".) Ask for a written response. If your situation changes while you are on the waiting list, advise your service coordinator of the situation.

If Found Eligible for the Waiver and Awarded a Slot
Typically eligibility for the waiver is not determined until a slot is available, since eligibility determinations are time limited. If you are awarded a waiver slot and found eligible, you should begin receiving waiver services promptly. **If you have been waiting longer than 30 days for services to begin after being found eligible for the waiver program, contact P&A for possible assistance.**

HEAD AND SPINAL CORD INJURY (HASCI) WAIVER PROGRAM

Who should apply:

Persons up to 65 years of age who have a head or spinal cord injury or both or a similar disability **not** associated with the process of a progressive degenerative illness, disease, dementia or a neurological disorder related to aging. Persons must meet the level of care for a Nursing Facility or an Intermediate Care Facility for the Mentally Retarded (ICF/MR) and be eligible for Medicaid. The individual must also be dependent on others to provide or assist with critical health needs, basic activities of daily living or require daily monitoring or supervision in order to avoid institutionalization. If the cost of home and community based services exceeds the cost of care in an institution, DDSN **may** be able to deny waiver services.

Services:

Attendant Care
Speech, Hearing, and Language Services
Nursing Services
PERS (Personal Emergency
Prevocational Habilitation
Day Habilitation Services
Occupational Therapy Services
Prescription Drugs

Response System)
Psychological Services
Behavior Support Services
Private Vehicle Modifications
Respite Care
Supported Employment Services
Residential Habilitation
Environmental Modifications
Physical Therapy Services
Medical Supplies, Equipment, and Assistive Technology
Peer Guidance for Consumer Directed Care
Health Education for Consumer Directed Care

How to Apply for the Head and Spinal Cord Injury (HASCI) Waiver

Call your HASCI Coordinator or the toll-free HASCI line at 1-866-867-3864. Explain that you want to apply for the HASCI waiver program and ask for any information they have regarding the HASCI waiver and the process. Write down the name of the person you talked to.

Confirm in writing. Even if you are told no money or services are available right now, it is **very** important to put your request in writing and either have your name added to the waiting list or receive a denial in writing. (See Appendix C, sample letter "C".) **In your letter, state that you are confirming your request for waiver services, and mention the name of the person you talked to on the phone. Also explain, in detail, if you feel you have a critical need for waiver services (such as a recent or pending discharge from a hospital or the loss of a caregiver), because it may determine how quickly you are able to receive services.** Keep a copy of this letter for your records.

Receive Written Response of Eligibility
As an Applicant, you should receive a written notice confirming or denying your eligibility or placing you on a waiting list. Make sure you get a written response. **If you wait longer than 90 days for this determination or you are refused a response in writing, contact Protection and Advocacy for People with Disabilities, Inc. for possible assistance.**

If Placed on a Waiting List
Since an applicant's priority category and place on the waiting list are the primary factors that determine when a slot is awarded and services begin, you should appeal if you feel a mistake was made in placing you in a particular category. Call your local DDSN coordinator for the DDSN appeal process.

Send a Letter to Check on Waiting List Status
If you have been on the waiting list longer than 60 days without hearing from your service coordinator, you may want to write a letter to your service coordinator asking where you are on the waiting list. (See Appendix C, sample letter "D".) Ask for a written response. If your situation changes while you are on the waiting list, advise your service coordinator of the situation.

If Found Eligible for the Waiver and Awarded a Slot
Typically eligibility for the waiver is not determined until a slot is available, since eligibility determinations are time limited. If you are awarded a waiver slot and found eligible, you should begin receiving waiver services promptly. **If you have been waiting longer than 30 days for services to begin after being found eligible for the waiver program, contact P&A for possible assistance.**

How to Appeal a Denial of Eligibility for a DDSN Waiver Based on Level of Care (LOC)

If you were found not to meet **ICF/MR level of care** for the MR/RD, Community Supports, or HASCI waivers, and you believe the decision to be in error, there are two methods to appeal the level of care determination. http://www.ddsn.sc.gov/about/directives-standards/Documents/currentdirectives/100-30-DD%20Revised%20-%20Website.pdf If you have no new information that you can provide, submit your appeal letter to the Department of Health and Human Services within 30 days of the decision(see Appendix C, sample letter "Q") and contact P&A for possible representation.

If you have new information that you can provide as evidence of your level of care, submit this information along with your Request for Reconsideration (see Appendix C, sample letter "G") to the Consumer Assessment Team (CAT) within 30 days. If you do not agree with their decision, you may contact the Department of Health and Human Services within 30 days (see Appendix C, sample letter "Q") and contact P&A for possible representation.

If you were found not to meet **Nursing Facility level of care** for the HASCI waiver, you will need to submit your Request for Reconsideration to the HASCI Division Director **before your current level of care determination expires** or, if you have no previous level of care determination, within 30 days (see Appendix C, sample letter "H"). If you do not agree with this decision, you may contact the Department of Health and Human Services within 30 days (see Appendix C, sample letter O) and contact Protection & Advocacy for People with Disabilities Inc. for possible representation.

How to Appeal a Denial of Waiver Services for Any Other Reason

If you are found to be ineligible for waiver services for a reason other than level of care, the written notice must include reasons why you have been found ineligible. http://www.ddsn.sc.gov/about/directives-standards/Documents/currentdirectives/100-30-DD%20Revised%20-%20Website.pdf The notice should also explain the appeal rights through the Medicaid appeal process. (See Appendix C, document "P" re: the Medicaid appeal process.) If you have reason to believe the denial is wrong because you do in fact meet the eligibility standards for the waiver, send an appeal letter to your service coordinator no later than 30 days after the denial of your application (see Appendix C, sample letter "E"). Your service coordinator must help you write an appeal letter if you need assistance. Your service coordinator will forward your letter to the Director of the Consumer Assessment Team within 5 business days. A written decision should be provided to you within 30 days. If you do not agree with this decision, contact the Department of Health and Human Services in writing within 30 days (see Appendix C, sample letter "Q"). Contact P&A for possible representation.

How to Appeal an Adverse Decision Regarding Waiver Services

If you receive an adverse decision that negatively affects your services, the written notice must include reasons why services are being denied or reduced. http://www.ddsn.sc.gov/about/directives-

standards/Documents/currentdirectives/100-30-DD%20Revised%20-%20Website.pdf The notice should also explain the appeal rights through the Medicaid appeal process. (See Appendix C, document "P" re: the Medicaid appeal process.) If you have reason to believe the decision is in error, send an appeal letter to the State Director of SCDDSN no later than 30 days after the decision including information why you feel the change in services was incorrect, previous efforts you have taken to resolve the complaint and the relief sought (see Appendix C, sample letter "F"). You may request that current services continue while your appeal is being reviewed. You may be responsible for repayment of these services if you lose your appeal. Ask your service coordinator to explain this process if you have concerns about repayment. Contact P&A if you are unsure about your rights. If you do not receive a written decision on your appeal within 30 days, contact your service coordinator to check on the status. You may also want to contact P&A for possible representation.

If you receive an unfavorable decision from the DDSN State Director, contact the SC Department of Health and Human Services in writing within 30 days (see Appendix C, sample letter "Q") and contact P&A for possible representation. If the Department of Health and Human Services refuses to hear your case, contact P&A for possible representation.

PERVASIVE DEVELOPMENTAL DISORDER (PDD) WAIVER PROGRAM

Who should apply:

Parents or guardians of children ages 3-10 who have been diagnosed with a Pervasive Developmental Disorder by age 8, such as Autism or Asperger's Syndrome, and who require the level of care provided in an Intermediate Care Facility for the Mentally Retarded (ICF/MR).

Services:

Case Management/Service Coordination
Early Intensive Behavioral Intervention (EIBI)

How to Apply for the Pervasive Developmental Disorder (PDD) Waiver

Call your child's service coordinator or the PDD Waiver Intake Line.
If the child is currently in the DDSN system, contact his or her DSN service coordinator or Early Interventionist to assist you in submitting an application.

If the child is not being served by DDSN, call the PDD Waiver Intake & Referral Toll Free Number at 1-888-576-4658. You will be asked to leave a short message that includes your contact number and the child's name and date of birth.

An information & referral specialist will call you back within 48 hours and ask you some questions. Have the following information ready:

1) Child's age, date of birth, social security number

2) Age child was first diagnosed with PDD
3) Name, address and phone number of the professional practitioner who made the PDD diagnosis
4) Your child's Medicaid status (eligible, in process of review, or denied)

Explain any urgent need for services and write down the name of the person you talked to.

Confirm in writing. Even if you are told no money or services are available right now, it is **very** important to put your request in writing and either have your name added to the waiting list or receive a denial in writing. (See Appendix C, sample letter "I".) **In your letter, state that you are confirming your request for waiver services, mention the name of the person you talked to on the phone. Also explain, in detail, if you feel you have a critical need for waiver services (such as a recent or pending discharge from a hospital or the loss of a caregiver), because it may determine how quickly you are able to receive services.** Keep a copy of this letter for your records.

Receive Written Response of Eligibility
As an Applicant, you should receive a written notice confirming or denying your eligibility or placing you on a waiting list. Make sure you get a written response. **If you wait longer than 90 days for this determination or you are refused a response in writing, contact Protection and Advocacy for People with Disabilities for possible assistance.**

If Placed on a Waiting List
Since an applicant's priority category and place on the waiting list are the primary factors that determine when a slot is awarded and services begin, you should appeal if you feel a mistake was made in placing you in a particular category. Call your local DDSN coordinator for the DDSN appeal process.

Send a Letter to Check on Waiting List Status
If you have been on the waiting list longer than 60 days without hearing from your service coordinator, you may want to write a letter to your service coordinator asking where you are on the waiting list. (See Appendix C, sample letter "J".) Ask for a written response. If your situation changes while you are on the waiting list, advise your service coordinator of the situation.

If Found Eligible for the Waiver and Awarded a Slot
Typically eligibility for the waiver is not determined until a slot is available, since eligibility determinations are time limited. If you are awarded a waiver slot and found eligible, you should begin receiving waiver services promptly. **If you have been waiting longer than 30 days for services to begin after being found eligible for the waiver program, contact P&A for possible assistance.**

How to Appeal a Decision Regarding the PDD Waiver

If your child/ward is found to be ineligible for PDD waiver services, the written notice must include reasons why he or she has been found ineligible. http://www.ddsn.sc.gov/about/directives-standards/Documents/currentdirectives/100-30-DD%20Revised%20-%20Website.pdf The notice should also explain the appeal rights through the Medicaid appeal process. (See Appendix C, document "P" re: the Medicaid appeal process.) If you have reason to believe the denial is incorrect, send an appeal letter to the DDSN State Director no later than 30 days after the denial of the application (see Appendix C, sample letter "F"). The service

coordinator must help you write an appeal letter if you need assistance. The service coordinator will forward your letter to the Director of the Consumer Assessment Team within five business days. A written decision should be provided to you within 30 days. If you do not agree with this decision, contact the Department of Health and Human Services in writing within 30 days (see Appendix C, sample letter "Q"). Contact P&A for possible representation.

COMMUNITY CHOICES WAIVER PROGRAM

Who should apply:

Persons 18 years of age or older who are unable to perform their own activities of daily living due to illness or disability and who need a Nursing Facility level of care. Persons must be eligible for Medicaid. (See page 12 for how to apply for this waiver.)

Services:

- Companion
- Personal Care I/II
- Adult Day Health Care
- Environmental Modification
- Respite Care in a CRCF
- Incontinence Supplies
- Chore Service (limited circumstances)
- Nutritional Supplements
- Limited Durable Medical Equipment
- Telemonitoring
- Case Management
- Home Delivered Meals
- Adult Day Health Care Nursing
- Institutional Respite Care
- Attendant Care
- Personal Emergency Response System (PERS)
- Enhanced Environmental Modifications
- Nursing Home Transition Services
- Adult Day Health Transportation
- Adult Care Home (pending CMS approval)

HIV/AIDS WAIVER PROGRAM

Who should apply:

Persons of any age who have a diagnosis of HIV/AIDS and are considered to be at risk of hospitalization. Persons must be eligible for Medicaid. (See page 12 for how to apply for this waiver.)

Services:

- Case Management
- Home Delivered Meals
- Companion Services
- Attendant Care
- Limited Incontinence Supplies
- Enhanced Environmental Modifications
- Personal Care I/II
- Private Duty Nursing
- Environmental Modifications
- Prescription Drugs
- Nutritional Supplements

MECHANICAL VENTILATOR WAIVER PROGRAM

Who should apply:

Persons age 21 years or older who are dependent upon a mechanical ventilator for breathing and need Nursing Facility level of care. Persons must be eligible for Medicaid. (See below for how to apply for this waiver.)

Services:

- Personal Care I/II
- Institutional Respite Care
- Prescription Drugs
- Attendant Care
- In-home Respite Care
- Nutritional Supplements
- Private Duty Nursing
- Environmental Modifications
- Specialized Medical Equipment & Supplies
- Personal Emergency Response System (PERS)
- Incontinence Supplies
- Enhanced Environmental Modifications

How to Apply for the Community Choices Program Waiver, HIV/AIDS Program Waiver or Mechanical Ventilator Program Waiver

Call your local Community Long Term Care office (see Appendix B). **Tell them you want to apply for the Community Choices, HIV/AIDS, or Mechanical Ventilator Waiver Program. Ask for any information they have regarding the process.** Write down the name of the person you talked to.

Confirm in writing. Even if you are told no money or services are available right now, it is **very** important to put your request in writing and either have your name added to the waiting list or receive a denial in writing. In your letter, state that you are confirming your application for the Community Choices, HIV/AIDS or Mechanical Ventilator waiver (see Appendix C, sample letter "K"). **Also explain, in detail, if you feel you have a critical need for waiver services (such as a recent or pending discharge from a hospital or the loss of a caregiver), because it may determine how quickly you are able to receive services.** Keep a copy of this letter for your records.

Telephone Screening

Within 3 days of calling CLTC, a nurse will call and conduct a telephone screening asking for more specific information.

Community Choices Program Waiver

You will then be placed on a waiting list for an assessment to determine if you are eligible for the waiver. **If you wait longer than 90 days to be determined eligible, contact Protection and Advocacy for People with Disabilities (P&A) for possible assistance.** When your name nears the top of the waiting list, a nurse will conduct a home visit to determine eligibility. Eligibility is generally determined on a first come, first served basis. However, if you have been in a nursing home or hospital longer than 90 days, your name will go the top of the list.

HIV/AIDS or Mechanical Ventilator Program Waiver
A nurse will conduct a home visit within 10 working days to assess eligibility. Services will begin as soon as possible.

Receive Written Response of Eligibility
You should receive written notice stating if you are eligible for the waiver or placing you on a waiting list. Make sure to get a written response. **If you wait longer than 90 days for service to begin after you have been determined eligible, contact P&A for possible assistance.**

Send a Letter to Check Waiting List Status
You should periodically write a letter to the local CLTC office asking where you are on the waiting list (see Appendix C, sample letter "L"). Ask for a written response.

How to Appeal a Denial

If you are found to be ineligible for waiver services, a written notice must include reasons why you're being denied. The notice should also explain the appeal rights up through the Medicaid appeal process (see Appendix C, document "P" re: the Medicaid appeal process). If you have reason to believe the denial is wrong because you in fact meet the eligibility standards for the waiver, send an appeal letter to the Department of Health and Human Services no later than 30 days after the denial of your application (see Appendix C, sample letter "Q"). Contact Protection and Advocacy for People with Disabilities for possible representation.

MEDICALLY COMPLEX CHILDREN'S WAIVER PROGRAM

Who should apply:

Persons under the age of 18 who have a chronic medical condition that is expected to last longer than 12 months and is dependent upon comprehensive medical, nursing, and health supervision. He or she must meet Nursing Facility or ICF/MR level of care and be eligible for Medicaid.

Services:

- Care Coordination
- Medical Day Care
- Incontinence Supplies
- In-home respite care

How to Apply for the Medically Complex Children's (MCC) Waiver

Call the MCC Waiver Intake & Referral line at (803) 898-2577. Tell them you want to apply for the Medically Complex Children's Waiver Program. Ask for any information they have regarding the process and a written application form if they have one. Write down the name of the person you talked to and mention that name in the letter of application you will send. Even if you are told no money or services are

available right now it is very important to apply in writing and either have your name added to the waiting list or receive a denial in writing.

Apply in writing
If there is a written application form, complete the application, make a copy for your records, and mail it to Medically Complex Children's Waiver, 1801 Main Street, Columbia, SC 29201. If there is no written application, follow up on your phone call with a letter saying that this letter is intended to be an application for the Medically Complex Children's waiver (see Appendix C, sample letter "K").

Receive Written Response of Eligibility
Applicants should receive written notice stating if you are eligible for the waiver. Make sure to get a written response either confirming or denying your eligibility. **If you wait longer than 90 days to be determined eligible or for service to begin after you have been determined eligible, contact P&A for possible assistance.**

Send a Letter to Check Waiting List Status
You should periodically write a letter to address above asking where you are on the waiting list (see Appendix C, sample letter "L"). Ask for a written response.

How to Appeal a Denial

If you are found ineligible for waiver services, a written notice must include reasons why you're being denied. The notice should also explain the appeal rights through the Medicaid appeal process (see Appendix C, document "P" re: the Medicaid appeal process). If you have reason to believe the denial is wrong because you do in fact meet the eligibility standards for the waiver, send an appeal letter to the Department of Health and Human Services no later than 30 days after the denial of your application (see Appendix C, sample letter "Q"). Contact Protection and Advocacy for possible representation.

COMMUNITY BASED ALTERNATIVES TO PSYCHIATRIC RESIDENTIAL TREATMENT FACILITIES (CHANCE) WAIVER PROGRAM

Who should apply:

Parents or guardians of children ages 4-19 with severe emotional disturbances who wish to be served in their homes and communities instead of residential psychiatric treatment facilities. The waiver will serve children statewide by 2012, but is not available in every county at this time. Check with the SCDMH Clinical Care Coordinator Suzan Watt at (803) 898-8652 for availability in your area. As of 2010, 50 spaces are available for the following counties: Richland, Lexington, Fairfield, Spartanburg, Cherokee, and Union. See www.chance.sc.gov.

Services:

- Psychiatric Medical Assessment
- Diagnostic & Therapeutic Services (Individual, Group, & Family Therapy)
- Youth Peer Support
- Community Based & Wraparound Services
- Case Management
- Respite Care Services
- Caregiver Peer Support
- Prevocational Services

How to Apply for the CHANCE-PRTF Waiver

Call the SCDMH Clinical Care Coordinator (Suzan Watt at (803) 898-8652). Tell her you want to apply for the CHANCE-PRTF waiver program for your child/ward and ask for any information they have regarding the waiver and the application process. Even if you are told no money or services are available right now, it is **very** important to put your request in writing and either have your child's/ward's name added to the waiting list or receive a denial in writing. **Follow up on your phone call with a letter saying that this letter is a confirmation of your request for the CHANCE-PRTF waiver for your child/ward (see Appendix C, sample letter "M").** Keep a copy of this letter for your records.

Receive Written Response of Eligibility
Applicants should receive a written notice confirming or denying eligibility or placing your child/ward on a waiting list. Make sure you get a written response. **If you wait longer than 90 days for this determination or you are refused a response in writing, contact Protection and Advocacy for People with Disabilities for possible assistance.**

If Found Eligible for the Waiver
If your child/ward waits longer than 90 days for services to begin after being found eligible for the waiver program, contact P&A for possible assistance.

Send a Letter to Check Waiting List Status
If your child/ward has been on the waiting list longer than 60 days without hearing from the Department of Mental Health, you may want to write a letter to the Clinical Care Coordinator asking where he/she is on the waiting list. (See Appendix C, sample letter "N".) Ask for a written response.

How to Appeal a Denial

DMH will send a letter of denial to the family within 24 hours of making an adverse decision. This letter should include information explaining your right to appeal and instructions on this process. The Family Advocate will be notified the day the letter is sent to the family. The Family Advocate should follow up with the family to answer their questions and provide help with the appeals process.

You must send a request for reconsideration in writing to the DMH Project Director within 30 days from the date you receive the letter. (See Appendix C, sample letter "O".) If you want the waiver benefits to continue for your child/ward during the appeal process, you must submit the request for reconsideration within 15 days.

DMH will review your appeal at the local level. They will have a hearing and make a decision within 10 days. The DMH Project Director will represent waiver staff at this hearing. DMH will then have to send a formal letter within 5 days providing information concerning the rest of the appeals process.

If the family is not satisfied with the decision at the DMH hearing, they can then appeal to DHHS at the state level within 30 days of the written notification from DMH, or within 15 days if they wish for services to continue during the appeals process. (See Appendix C, sample letter "Q".) DHHS will send a letter to the family with their determination within 10 days.

LOCAL DISABILITIES AND SPECIAL NEEDS (DSN) BOARDS

ABBEVILLE COUNTY

Emerald Center Multi-County DSN Board
2605 Hwy. 72/221 E.
Greenwood, SC 29649
864-942-8900

AIKEN COUNTY

Aiken County Board of Disabilities
P.O. Box 698
Aiken, SC 29802
803-642-8800

ALLENDALE COUNTY

Allendale/Barnwell County DSN Board
P.O. Box 310
Allendale, SC 29810
803-584-5050 Allendale

ANDERSON COUNTY

Anderson County DSN Board
212 McGee Road
Anderson, SC 29625
864-260-4515

BAMBERG COUNTY

Bamberg County DSN Board
P.O. Box 333
Denmark, SC 29042
803-793-5003

BARNWELL COUNTY

Allendale/Barnwell County DSN Board
P.O. Box 556
Barnwell, SC 29812
803-259-7472 Barnwell

BEAUFORT COUNTY

Beaufort County DSN Board
P.O. Box 129
Port Royal, SC 29935
843-525-7680

BERKELEY COUNTY

Berkeley Citizens, Inc.
P.O. Drawer 429
Moncks Corner, SC 29461
843-761-0300

CALHOUN COUNTY

Calhoun County DSN Board
78 Doodle Hill Road
St. Matthews, SC 29135
803-874-2664

CHARLESTON COUNTY

Charleston County DSN Board
995 Morrison Drive
Charleston, SC 29413
843-805-5800

CHEROKEE COUNTY

Cherokee County DSN Board
P.O. Box 340
Gaffney, SC 29342
864-487-4190

CHESTER COUNTY

Chester/Lancaster County DSN Board
P.O. Box 577
Lancaster, SC 29721
803-285-4368

CHESTERFIELD COUNTY

Chesterfield County DSN Board
P.O. Drawer 151
Chesterfield, SC 29709
843-623-9016

CLARENDON COUNTY

Clarendon County DSN Board
P.O. Drawer 40
Manning, SC 29102
803-435-2330

Appendix A

COLLETON COUNTY

Colleton County DSN Board
P.O. Box 1547
Walterboro, SC 29488
843-549-1732

DARLINGTON COUNTY

Darlington County DSN Board
201 N. Damascus Church Road
Hartsville, SC 29550
843-332-7252

DILLON COUNTY

Marion/Dillon County DSN Board
Service Coordinators
1002 S. Main Street
Mullins, SC 29574
843-464-2565 Dillon

DORCHESTER COUNTY

Dorchester County DSN Board
P.O. Box 2950
Summerville, SC 29483
843-871-1285

EDGEFIELD COUNTY

Emerald Center Multi-County DSN Board
2605 Hwy. 72/221 East
Greenwood, SC 29649
864-942-8900

FAIRFIELD COUNTY

Fairfield County DSN Board
P.O. Box 367
Winnsboro, SC 29180
803-635-2154

FLORENCE COUNTY

Florence County DSN Board
1211 E. National Cemetery Road
Florence, SC 29501
843-667-5007

GEORGETOWN COUNTY

Georgetown County DSN Board
P.O. Box 1471
Georgetown, SC 29442
843-546-8228

GREENVILLE COUNTY

Greenville County DSN Board
Family Supports
12 Winchester Court
Mauldin, SC 29662
864-288-1907

GREENWOOD COUNTY

Emerald Center Multi-County DSN Board
2605 Hwy. 72/221 East
Greenwood, SC 29649
864-942-8900

HAMPTON COUNTY

Hampton County DSN Board
P.O. Box 128
Hampton, SC 29924
803-943-4818

HORRY COUNTY

Horry County DSN Board
250 Victory lane
Conway, SC 29526
843-347-3010

JASPER COUNTY

Jasper County DSN Board
P.O. Box 747
Ridgeland, SC 29936
843-726-4499

KERSHAW COUNTY

Kershaw County DSN Board
P.O. Box 310
Camden, SC 29021
803-432-4841

LANCASTER COUNTY

Chester/Lancaster County DSN Board
P.O. Box 577
Lancaster, SC 29721
803-285-4368

LAURENS COUNTY

Laurens County DSN Board
Family Support
314 Owens Street
Laurens, SC 29360
864-984-0355 ext. 30

LEE COUNTY

Lee County DSN Board
P.O. Box 468
Bishopville, SC 29010
803-484-9473

LEXINGTON COUNTY

1) Richland/Lexington County DSN Board
   420 Rivermont Drive
   Columbia, SC 29210
   803-252-5179
2) Babcock Center
   P.O. Box 4389
   West Columbia, SC 29171
   803-799-1970

MARION COUNTY

Marion/Dillon County DSN Board
Service Coordinators
1002 S. Main Street
Mullins, SC 29574
843-423-4484 Marion

MARLBORO COUNTY

Marlboro County DSN Board
P.O. Box 1212
Bennettsville, SC 29512
843-479-1882

MCCORMICK COUNTY

Emerald Center Multi-County DSN Board
2605 Hwy. 72/221 East
Greenwood, SC 29649
864-942-8900

NEWBERRY COUNTY

Newberry County DSN Board
P.O. Box 856
Newberry, SC 29108
803-276-0078

OCONEE COUNTY

Oconee County DSN Board
116 South Cove Road
Seneca, SC 29672
864-885-6055

ORANGEBURG COUNTY

Orangeburg County DSN Board
P.O. Box 1812
Orangeburg, SC 29116
803-536-1170

PICKENS COUNTY

Pickens County DSN Board
P.O. Box 1308
Easley, SC 29641
864-859-5416 ext. 3

UNION COUNTY

Union County DSN Board
P.O. Box 903
Union, SC 29379
864-427-7700

RICHLAND COUNTY

1) Richland/Lexington County DSN Board
   420 Rivermont Drive
   Columbia, SC 29210
   803-252-5179
2) Babcock Center
   P.O. Box 4389
   West Columbia, SC 29171
   803-799-1970

WILLIAMSBURG COUNTY

Williamsburg County DSN Board
61 Greenlee Street
Kingstree, SC 29556
843-355-5481

SALUDA COUNTY

Emerald Center Multi-County DSN Board
2605 Hwy 72/221 East
Greenwood, SC 29649
864-942-8900

YORK COUNTY

York County DSN Board
7900 Park Place Road
York, SC 29745
803-628-5999

SPARTANBURG COUNTY

1) Spartanburg County DSN Board
   Community and Economic Development Dept.
   Attention: James Blackwood or Murray Cecil
   P.O. Box 5666
   Spartanburg, SC 29304
   864-595-5300
2) Charles Lea Center
   195 Burdette Street
   Spartanburg, SC 29307
   864-585-0322

SUMTER COUNTY

Sumter County DSN Board
P.O. Box 2847
Sumter, SC 29151-2847
803-778-1669

LOCAL COMMUNITY LONG TERM CARE OFFICES IN SOUTH CAROLINA

Appendix B

Area 1-Greenville

Greenville, Pickens
620 N. Main Street, #200
Greenville, SC 29601
864-242-2211
1-888-535-8523

Area 2-Spartanburg

Cherokee, Spartanburg, Union
1411 Wo Ezell Blvd., Suite 6
Spartanburg, SC 29301
864-587-4707
1-888-551-3864

Area 3- Greenwood

Abbeville, Edgefield,
Greenwood, Laurens,
McCormick, Saluda
P.O. Box 3088
Greenwood, SC 29648
864-223-8622
1-800-628-3838

Area 4- Rock Hill

Chester, Lancaster, York
1890 Neely's Creek Road
Rock Hill, SC 29730
803-327-9061
1-888-286-2078

Area 5-Columbia

Fairfield, Newberry,
Lexington, Richland
7499 Parklane Road, Suite 164
Columbia, SC 29223
803-741-0826
1-888-847-0908

Area 6-Orangeburg

Allendale, Bamberg, Barnwell, Calhoun,
Orangeburg
1857 Joe S. Jeffords Hwy.
Orangeburg, SC 29115
803-536-0122
1-888-218-4915

Area 6A-Aiken

Aiken
2230 Woodside Executive Court SW
Aiken, SC 29803
803-641-7680
1-888-364-3310

Area 7-Sumter

Clarendon, Kershaw, Lee, Sumter
30 Wesmark Court
Sumter, SC 29150
803-905-1980
1-888-761-5991

Area 8-Florence

Darlington, Dillon, Florence,
Chesterfield, Marlboro
201 Dozier Blvd.
Florence, SC 29501
843-667-8718
1-888-798-8995

Area 9-Conway

Georgetown, Horry, Marion, Williamsburg
P.O. Box 2150
Conway, SC 29528
843-248-7249
1-888-539-8796

Area 10-Charleston

Berkeley, Charleston, Dorchester
Rt. 4130 Faber Place Drive
North Charleston, SC 29405
843-529-0142
1-888-805-4397

Area 10A-Ridgeland

Beaufort, Colleton, Hampton, Jasper
P.O. Box 2065
Ridgeland, SC 29936
843-726-5353
1-800-262-3329

Area 11-Anderson

Anderson, Oconee
P.O. Box 5947
Anderson, SC 29623
864-224-9947
1-800-713-8003

CLTC Central Office

P.O. Box 8206
Columbia, SC 29202-8206
803-898-2590

http://www.scdhhs.gov/insidedhhs/Bureaus/BureauofLongTermCareServices/How%20Do%20I%20Apply.asp

A

LETTER CONFIRMING REQUEST FOR MR/RD WAIVER

Date
DSN Service Coordinator
Address

Re: (Mental Retardation/Related Disabilities or Community Supports Waiver) Request

Dear Mr./Ms. _____:

This is a letter to follow up on a conversation I had on ____ (date of telephone conversation or meeting). I am sending it to repeat and document my request for Medicaid-funded home and community based services.

I am _____ years old and have_____(type of disability). I presently live in _____ (name and location of nursing home, regional center, my own home, etc). I am medically stable but need assistance with personal care and daily living activities. I wish to live in the community because I want more choices on how to live my life. I would like to be considered for (MR/RD Waiver or Community Support) services as soon as possible.

I am requesting written information about (MR/RD or Community Supports) Waiver services, including the eligibility requirements. Please state in writing when I can expect to be assigned a (MR/RD or Community Supports) Waiver "slot" and when I will be assessed for this Medicaid program.

If I am on a waiting list for (MR/RD or Community Supports) Waiver services, I request to be informed in writing about my position and priority category. Please provide written information about the criteria used to determine this position and priority category on the waiting list and the process for checking my status on the waiting list.

Thank you very much for your assistance.

Sincerely,
(Signature)

Cc: MR/RD Division Director
South Carolina Department of Disabilities and Special Needs
P.O. Box 4706, Columbia, SC 29240

Anna Maria Darwin, Protection and Independence Team Leader
Protection and Advocacy for People with Disabilities,
545 N. Pleasantburg Drive, Suite 106, Greenville, SC 29607

Appendix C

Date

Name
DSN Service Coordinator
Address

Re: Status of MR/RD Waiver Services Request

Dear Mr./Ms. _____:

I requested a (MR/RD or Community Choices) Waiver on ____(date)___ and was placed on the waiting list. See attached notification regarding the (MR/RD or Community Choices) Waiver waiting list.

I am writing to get updated information about my current position and priority category on the (MR/RD or Community Choices) Waiver waiting list. Please provide this information in writing. Please also state in writing when I can expect to be assigned a (MR/RD or Community Choices) Waiver "slot" and when I will be assessed for Medicaid-funded home and community based services.

Thank you very much for your assistance.

Sincerely,
(Signature)

Print Name:
Address:
Telephone:

Cc: MR/RD Division Director
SC Department of Disabilities and Special Needs
P.O. Box 4706
Columbia, SC 29240

Anna Maria Darwin, Protection and Independence Team Leader
Protection and Advocacy for People with Disabilities
545 N. Pleasantburg Drive, Suite 106
Greenville, SC 29607

Appendix C

Date

HASCI Coordinator
Address

Re: Head and Spinal Cord Injury Waiver Request

Dear Mr./Ms. _____,

This is a letter to follow-up on my conversation with _____(HASCI Service Coordinator/Intake Coordinator) on ____(date)____. Please consider this a confirmation of my request for Medicaid services under the HASCI Waiver Program. I am _____ years old and am a person with_____(type of disability). I have lived in a _____ (nursing home, regional center, etc.) since___(date)_____.

I am medically stable and need assistance with some daily living activities. I want to live in the community because I want more choices on how to live my life. I would like to be considered for any service under the HASCI waiver program.

I am currently a resident of _____and can be contacted for an assessment at _____. My address is:
_____
Please provide me with a written list of criteria for the waiver. Also please let me know in writing when I will be assessed for the waiver. If I am placed on a waiting list, I request information on the criteria used to determine my status on the waiting list, approximately when I can expect to receive services and the process for checking on my status on the waiting list.

Thank you very much for your kind assistance in this matter.

Sincerely,
(Signature)

Print Name:
Address:
Telephone:

Cc: HASCI Division Director
SC Department of Disabilities and Special Needs
PO Box 4706, Columbia, SC 29240

Anna Maria Darwin, Protection and Independence Team Leader
Protection and Advocacy for People with Disabilities
545 N. Pleasantburg Drive, Suite 106, Greenville, SC 29607

D

HASCI WAIVER STATUS LETTER

Date

Appendix C

HASCI Coordinator
Address

Re: Status of HASCI Waiver Request

Dear Mr./Ms. _____,

I requested a HASCI Waiver on ____(date)_ and was placed on the waiting list to receive services. See attached letter of notification regarding the waiting list.

I am writing to obtain the status of my placement on the waiting list. Please notify me in writing as to my priority category, where I am on the list and the approximate date for receipt of services.

Thank you very much for your kind assistance in this matter.

Sincerely,
(Signature)

Print Name:
Address:
Telephone:

Cc: HASCI Division Director
SC Department of Disabilities and Special Needs
P.O. Box 4706
Columbia, SC 29240

Anna Maria Darwin, Protection and Independence Team Leader
Protection and Advocacy for People with Disabilities
545 N. Pleasantburg Drive, Suite 106
Greenville, SC 29607

Appendix C

Date

Name
Service Coordinator
Address

Re: Request for Reconsideration of Denial of Eligibility
for _____ Waiver

Dear Mr./Ms. _____:

I was denied eligibility for the _____Waiver on _____
(Name of Waiver) (Date of Denial)
See attached notification regarding the Denial. I am writing to request reconsideration of the decision. I feel the decision was wrong because
_____
_____.

Thank you very much for your assistance.

Sincerely,
(Signature)

Print Name:
Address:
Telephone:

Cc: _____ Division Director
(MR/RD or HASCI)
SC Department of Disabilities and Special Needs
P.O. Box 4706
Columbia, SC 29240

Anna Maria Darwin, Protection and Independence Team Leader
Protection and Advocacy for People with Disabilities
545 N. Pleasantburg Drive, Suite 106
Greenville, SC 29607

F

DDSN ADVERSE DECISION REGARDING SERVICES LETTER

Appendix C

Date

Beverly A. H. Buscemi, Ph.D.
State Director
SC Department of Disabilities and Special Needs
P.O. Box 4706
Columbia, SC 29240

Re: Request for Reconsideration of Denial of Services for _____ Waiver

Dear Dr. Buscemi:

I was denied services on the _____Waiver on _____.
(Name of Waiver) (Date of Denial)
See attached notification regarding the Denial. I am writing to request reconsideration of the decision. I feel the decision was wrong because
_____
_____.

Thank you very much for your assistance.

Sincerely,
(Signature)

Print Name:
Address:
Telephone:

Cc: _____ Division Director
(MR/RD, HASCI or Autism)
SC Department of Disabilities and Special Needs
P.O. Box 4706
Columbia, SC 29240

Anna Maria Darwin, Protection and Independence Team Leader
Protection and Advocacy for People with Disabilities
545 N. Pleasantburg Drive, Suite 106
Greenville, SC 29607

Appendix C

Date

Consumer Assessment Team
SC Department of Disabilities and Special Needs
P.O. Box 4706
Columbia, SC 29240

Re: Request for Reconsideration of ICF/MR Level of Care
for _____ Waiver

Dear Mr./Ms. _____:

I was found not to meet ICF/MR level of care for the _____ (Name of Waiver)
Waiver on _____.
(Date of Denial)

See attached notification regarding the decision. I am writing this letter to request reconsideration of the decision. I feel the decision was wrong because _____
_____.
I have attached additional documentation for your consideration.

Thank you very much for your assistance.

Sincerely,
(Signature)

Print Name:
Address:
Telephone:

Cc: _____ Division Director
(MR/RD or HASCI)
SC Department of Disabilities and Special Needs
P.O. Box 4706
Columbia, SC 29240

Anna Maria Darwin, Protection and Independence Team Leader
Protection and Advocacy for People with Disabilities
545 N. Pleasantburg Drive, Suite 106
Greenville, SC 29607

Appendix C

Date

HASCI Division Director
SC Department of Disabilities and Special Needs
P.O. Box 4706
Columbia, SC 29240

Re: Request for Reconsideration of Nursing Facility Level of Care for the HASCI Waiver

Dear Mr./Ms. _____:

I was found not to meet Nursing Facility level of care for the HASCI Waiver on _____.
(Date of Denial)

See attached notification regarding the decision. I am writing this letter to request reconsideration of the decision. I feel the decision was wrong because _____
_____.
I have attached additional documentation for your consideration.

Thank you very much for your assistance.

Sincerely,
(Signature)

Print Name:
Address:
Telephone:

Cc: Anna Maria Darwin, Protection and Independence Team Leader
Protection and Advocacy for People with Disabilities
545 N. Pleasantburg Drive, Suite 106
Greenville, SC 29607

Appendix C

Date

Service Coordinator/Intake Coordinator
Address

Re: Pervasive Developmental Disorder Waiver Request

Dear Mr./Ms. _____,

This is a letter to follow-up on my conversation with _____(Service Coordinator/Intake Coordinator) on _____. Please consider this a confirmation of my request for Medicaid services under the PDD Waiver Program for my child/ward_____ (name of child/ward). My child/ward is _____ years old and has been diagnosed with _____(type of disability).

Please provide me with a written list of criteria for the waiver. Also please let me know in writing when my child/ward will be assessed for the waiver. If he/she is placed on a waiting list, I request information on the criteria used to determine his/her status on the waiting list, approximately when he/she can expect to receive services, and the process for checking on his/her status on the waiting list.

Thank you very much for your kind assistance in this matter.

Sincerely,
(Signature)

Print Name:
Address:
Telephone:

Cc: Autism Division Director
SC Department of Disabilities and Special Needs
PO Box 4706
Columbia, SC 29240

Anna Maria Darwin, Protection and Independence Team Leader
Protection and Advocacy for People with Disabilities
545 N. Pleasantburg Drive, Suite 106
Greenville, SC 29607

Date

Appendix C

Service Coordinator
Address

Re: Status of PDD Waiver Request

Dear Mr./Ms. _____,

I requested a PDD Waiver on ___(date)_____ for my child/ward _____ (name of child/ward) and he/she was placed on the waiting list to receive services. See attached letter of notification regarding the waiting list.

I am writing to obtain the status of my child's/ward's placement on the waiting list. Please notify me in writing as to his/her priority category, where he/she is on the list and the approximate date for receipt of services.

Thank you very much for your kind assistance in this matter.

Sincerely,
(Signature)

Print Name:
Address:
Telephone:

Cc: Autism Division Director
SC Department of Disabilities and Special Needs
P.O. Box 4706
Columbia, SC 29240

Anna Maria Darwin, Protection and Independence Team Leader
Protection and Advocacy for People with Disabilities
545 N. Pleasantburg Drive, Suite 106
Greenville, SC 29607

Date

Appendix C

CLTC Waiver Program
Local CLTC Office
(See Appendix B)

Re: _____ Waiver Application

Dear Mr./Ms. _____:

This is a letter to follow up on a conversation I had with _____ (person at the local CLTC you spoke with) on ____ regarding waiver services. Please consider this an application for Medicaid services under the _____Waiver Program. I am _____ years old and am a person with_____(type of disability). I have lived in a _____ (nursing home, regional center, etc.) since_(date)____.

I am medically stable and need assistance with some daily living activities. I wish to live in the community because I want more choices available to me regarding work, friends, family, recreation, etc. I would like to be considered for any service under the _____ waiver program.

Please provide me with a written list of criteria for the waiver. Also please let me know in writing when I will be assessed for the waiver. If I am placed on a waiting list, please let me know approximately when I can expect to receive services and the process for checking my status on the waiting list. Thank you very much for your kind assistance in this matter.

Sincerely,
(Signature)

Print Name:
Address:
Telephone:

Cc: Director
Bureau of Community Long Term Care
SC Department of Health and Human Services
P.O. Box 8206, Columbia, SC 29202

Anna Maria Darwin, Protection and Independence Team Leader
Protection and Advocacy for People with Disabilities
545 N. Pleasantburg Drive, Suite 106
Greenville, SC 29607

Date

Appendix C

CLTC Waiver Program
Local CLTC Office
(See Appendix B)

Re: Status of _____ Waiver Application

Dear Mr./Ms. _____:

I applied for the _____ Waiver Program on __(date)_____ and was placed on the waiting list. See attached letter of notification regarding the waiting list.

I am writing to obtain the status of my placement on the waiting list. Please notify me in writing as to where I am on the list and the approximate date for assessment/receipt of services.

Thank you very much for your kind assistance in this matter.

Sincerely,
(Signature)

Print Name:
Address:
Telephone:

Cc: Director
Bureau of Community Long Term Care
SC Department of Health and Human Services
P.O. Box 8206, Columbia, SC 29202

Anna Maria Darwin, Protection and Independence Team Leader
Protection and Advocacy for People with Disabilities
545 N. Pleasantburg Drive, Suite 106
Greenville, SC 29607

Appendix C

Date

Suzan Watt
DMH Project Director
2414 Bull Street
Columbia, South Carolina 29202

Re: CHANCE Waiver Request

Dear Ms. Watt:

This is a letter to follow up on a conversation I had on ____ (date of telephone conversation or meeting). I am sending it to repeat and document my request for Medicaid-funded home and community based services.

My child/ward is _____ years old and has_____(type of disability). I would like for my child/ward to be considered for CHANCE Wavier services as soon as possible.

I am requesting written information about CHANCE Waiver services, including the eligibility requirements. Please state in writing when my child/ward can expect to be assigned a CHANCE Waiver "slot" and when he/she will be assessed for this Medicaid program.

If my child/ward is on a waiting list for CHANCE Waiver services, I request to be informed in writing about his/her position and priority category. Please provide written information about the criteria used to determine this position and priority category on the waiting list and the process for checking his/her status on the waiting list.

Thank you very much for your assistance.

Sincerely,
(Signature)

Cc: Anna Maria Darwin, Protection and Independence Team Leader
Protection and Advocacy for People with Disabilities,
545 N. Pleasantburg Drive, Suite 106
Greenville, SC 29607

N

CHANCE WAIVER STATUS LETTER

Date

Appendix C

Suzan Watt
DMH Project Director
2414 Bull Street
Columbia, South Carolina 29202

Re: Status of CHANCE Waiver Services Request

Dear Ms. Watt:

I requested a CHANCE Waiver for my child/ward on __(date)____ and he/she was placed on the waiting list. See attached notification regarding the CHANCE Waiver waiting list.

I am writing to get updated information about my child's/ward's current position and priority category on the CHANCE Waiver waiting list. Please provide this information in writing. Please also state in writing when my child/ward can expect to be assigned a CHANCE Waiver "slot" and when he/she will be assessed for Medicaid-funded home and community based services.

Thank you very much for your assistance.

Sincerely,
(Signature)

Print Name:
Address:
Telephone:

Cc: Anna Maria Darwin, Protection and Independence Team Leader
Protection and Advocacy for People with Disabilities
545 N. Pleasantburg Drive, Suite 106
Greenville, SC 29607

Appendix C

Date

Suzan Watt
DMH Project Director
South Carolina Department of Mental Health
2414 Bull Street
Columbia, South Carolina 29202

Re: Request for Reconsideration of Denial of Eligibility for CHANCE Waiver

Dear Ms. Watt:

My child/ward was denied eligibility for the CHANCE Waiver on _____ (Date of Denial). See attached notification regarding the Denial. I am writing to request reconsideration of the decision. I feel the decision was wrong because_____
_____
_____.

Thank you very much for your assistance.

Sincerely,
(Signature)

Print Name:
Address:
Telephone:

CC: Anna Maria Darwin, Protection and Independence Team Leader
Protection and Advocacy for People with Disabilities
545 N. Pleasantburg Drive, Suite 106
Greenville, SC 29607

Appendix C

As a Medicaid applicant/recipient you have the right to request a fair hearing regarding a decision affecting Medicaid eligibility or services. To initiate the appeal process, you or your representative must send a written request to the following address **no later than 30 calendar days** from the receipt of written notification for any action adversely affecting your Medicaid coverage. (See Appendix C, sample letter "Q").

Division of Appeals and Hearings
Department of Health and Human Services
P.O. Box 8206
Columbia, SC 29202-8206

Please attach a copy of the written notification of the Medicaid Waiver denial with your appeal request. In your request for a fair hearing you must state specifically what issue(s) you wish to appeal.

Unless a request is made within 30 calendar days of receipt of written notification, the decision will be final and binding. A request for a fair hearing is considered filed if postmarked by the 30th calendar day following receipt of written notification. You will be advised in writing by the Division of Appeals and Hearings as to the status of your appeal request within 10 days.

You may be eligible to receive continued Medicaid benefits pending a hearing decision. If you are interested in continued benefits, you must contact your case manager within 10 calendar days of the effective date of the action. If the hearing decision is not in your favor, you may be required to repay Medicaid benefits received during the appeals process.

Contact Protection and Advocacy for People with Disabilities at 1-866-275-7273 (toll-free) to see if we may be able to assist you with your appeal.

Appendix C

Date

Division of Appeals and Hearings
Department of Health and Human Services
P.O. Box 8206
Columbia, SC 29202-8206

Re: Medicaid Waiver Appeal for (Your Name or Name of Child/Ward)

Dear Sir or Madam:

I am writing to request a Fair Hearing regarding the decision of the (Department of Disabilities and Special Needs, Department of Health and Human Services, or Department of Mental Health) to deny eligibility for (or reduce services under) the (Insert name of waiver here) Waiver program. A copy of the denial is enclosed.

I feel this decision was incorrect for the following reasons:_____
_____
_____.

Please let me know if you need anything further to proceed with this request.

Sincerely,

Cc: (Director of Division where you originally applied for services)
Address

Anna Maria Darwin, Protection and Independence Team Leader,
Protection and Advocacy for People with Disabilities,
545 N. Pleasantburg Drive, Suite 106
Greenville, SC 29607

Appendix D

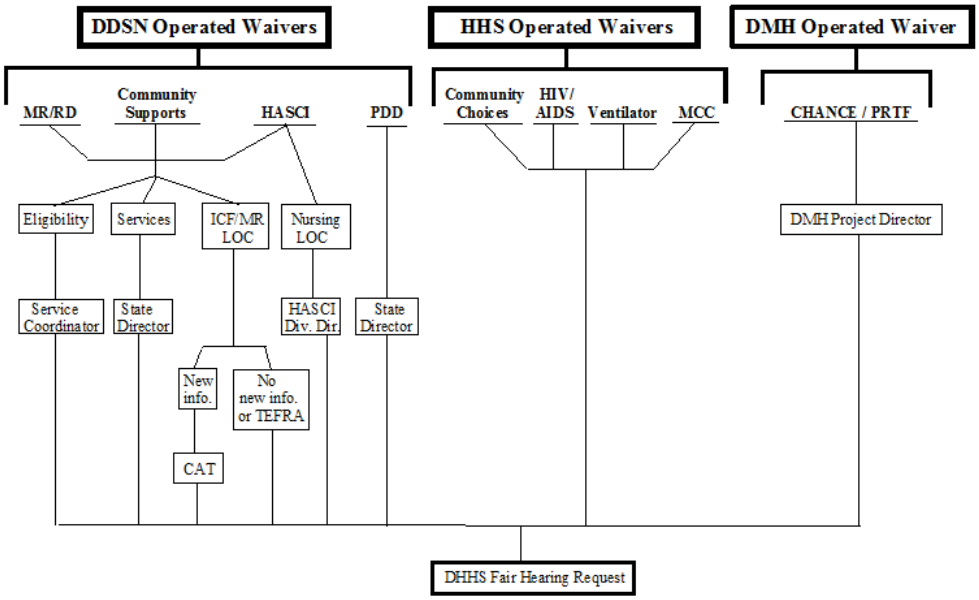
DDSN Operated Waivers
HHS Operated Waivers
DMH Operated Waiver
MR/RD
Community Supports
HASCI
PDD
Community Choices
HIV/ AIDS
Ventilator
MCC
CHANCE / PRTF
Eligibility
Services
ICF/MR LOC
Nursing LOC
DMH Project Director
Service Coordinator
State Director
HASCI Div. Dir.
State Director
New info.
No new info. or TEFRA
CAT
DHHS Fair Hearing Request